Kelvion

Customized Air Coolers

Kelvion MCK

POWERFUL BLOW THROUGH COOLER FOR COLD ROOMS

Kelvion

HEYTEC
GAAT VERDER ▸ VA PLUS LOIN

EXPERTS IN HEAT EXCHANGE – SINCE 1920

Welcome to Kelvion! Where Heat Exchange is our Business. We are one of the leading global manufacturers of heat exchangers and have been providing solutions for almost every industrial application imaginable since the 1920s, specializing in customized solutions suitable for extreme environmental conditions - as of 2015 under the name of Kelvion.

With one of the most extensive selections of heat exchangers in the world, we are a well-known partner in many industries, including transportation, energy, oil and gas, the heavy industry, chemical and marine as well as sugar, food and beverage and the HVAC and refrigeration technology sector. Our products include Compact Fin Heat Exchangers, Plate Heat Exchangers, Single Tube Heat Exchangers, Transformer Cooling Systems, Cooling Towers and Shell & Tube Heat Exchangers.

Our many years of experience and in-depth expertise have made us specialists in this field. Our heat exchangers are designed specifically to meet the needs of the respective machine or equipment system, ensuring outstanding energy efficiency and reliability in any market segment. This gives our customers a cutting-edge over their competitors while also reducing operating costs over the long term.

As your heat exchange partner, we understand that outstanding and reliable after-sales services are critical for you, our customer, and we work alongside with you in close partnership supporting you throughout the full life cycle of your plant and equipment to ensure lasting business success.

Kelvion – Experts in Heat Exchange.

KELVION – A TRIBUTE TO LORD KELVIN (1824 - 1907)

Lord Kelvin formulated the laws of thermodynamics and absolute units of temperature are stated in kelvin, in his honor.

OUR LOGO – INSPIRED FROM THE SCHEMATIC FOR HEAT EXCHANGER

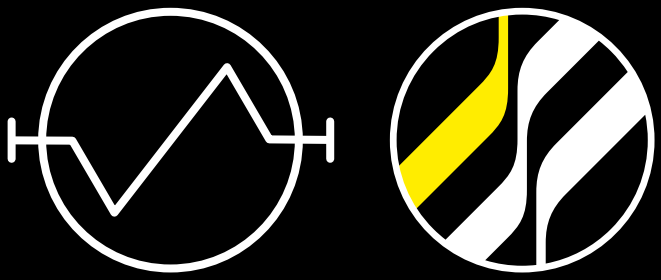

67 BRANCHES AND SALES PARTNERS WORLDWIDE

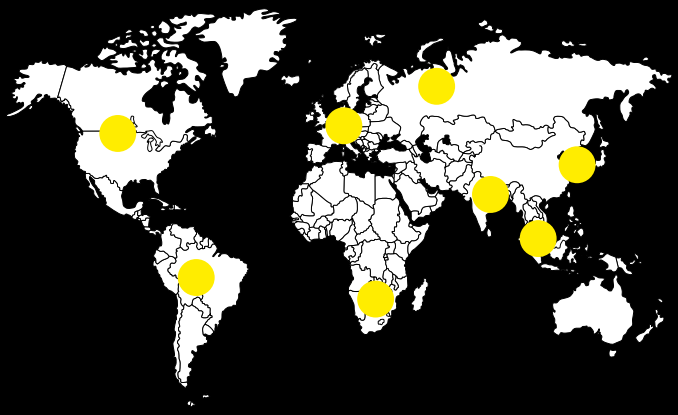

5,000 EMPLOYEES WORLDWIDE

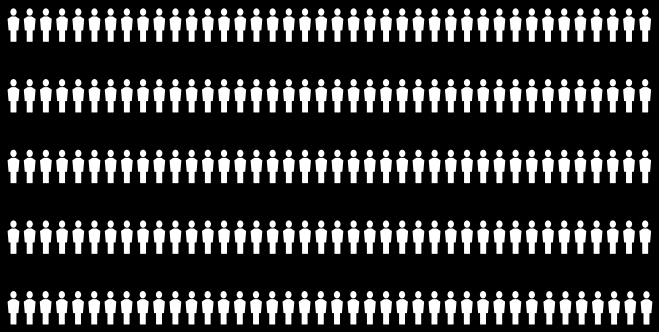

YOUR MARKETS ARE OUR MARKETS

- Chemicals
- Data Center
- Food & Beverage
- HVAC
- Refrigeration
- Marine
- Oil & Gas
- Power
- Transportation
- ... and more

KELVION HAS A LONG HISTORY

2015 With the new name, the former GEA Heat Exchangers is writing its own history as Kelvion.

2014 GEA sells the Heat Exchangers Segment to Triton.

2010 Reorganization of GEA's 9 Divisions into technologically distinct Segments. The largest segment is the Heat Exchangers Segment.

1999 In April 1999, GEA was acquired by mg technologies AG

1920 Foundation of GEA in Bochum by Otto Happel sen. (Born 1882)

Kelvion MCK

POWERFUL CEILING MOUNTED AIR COOLER FOR COMMERCIAL APPLICATIONS

EUROVENT CERTIFIED PERFORMANCE
www.eurovent-certification.com

CAPACITY RANGE (for SC2)

1.5 kW — 9.4 kW

TEMPERATURE RANGE (t_{L1})

-30°C — +20°C

TYPE DESIGNATION CODE

Please note the comparison to our old type designation code (DE professional) on page 15

1	2	3		4	5		6	7	8		9
M	C	K	-	30	1	-	4	A	E	-	

1 Size of product
2 Case style of product
3 Coil block system
4 Fan diameter
5 Number of fans
6 Number of rows deep
7 Fin spacing
8 Defrost system
9 Additional information

Refrigerant & max. operating pressure (Box 9)

HX32	HFC | 32 bar
GL16	Glycol | 16 bar
CX45	CO_2 | 45 bar
CX60	CO_2 | 60 bar

HEYTEC
GAAT VERDER ▸ VA PLUS LOIN

Kelvion MCK

APPLICATION BENEFITS FOR CONTRACTORS AND OPERATORS

Application examples

- Commercial applications
- Small rooms and low ceilings
- Open sales areas
- Low noise requirement

CEILING MOUNTED EVAPORATOR WITH DRAUGHT-FREE AIR FLOW

For the most demanding applications the Kelvion MCK is up to the job. Whether aggressive ambient air, critical storage conditions or constant exchange of air: For fine-tuned cooling reliability, the high-performance evaporator offers variable corrosion protection, options for defrosting solutions and fan types to suit the requirements.

The Kelvion MCK is particularly suitable for:

- Cold rooms which are accessed frequently and therefore regularly exchange air with the ambient air
- Air containing particles which may be a by-product of industrial cooling processes (salts, organic acids in pickling rooms, organic acids or amines in meat and sausages)

The Kelvion MCK offers obvious space saving as well as the powerful ceiling mounted evaporator with draught-free air flow.

The size of the store and type of stored goods are decisive in the selection of air coolers.

For high turnover of goods and long storage times, the Kelvion MCK is the benchmark in terms of efficiency and reliability. If the storage rooms are frequently accessed to remove or store goods, the cooling power of the evaporator must be dimensioned to ensure that the indoor temperature distribution remains constant.

Conditions changing frequently from dry, to moist, to cold and to warm will create high corrosive stress. The lower temperature on the air cooler surfaces builds up condensate. Acidic salts or or cleaning agent particles in the cold room air accumlate on those surfaces.

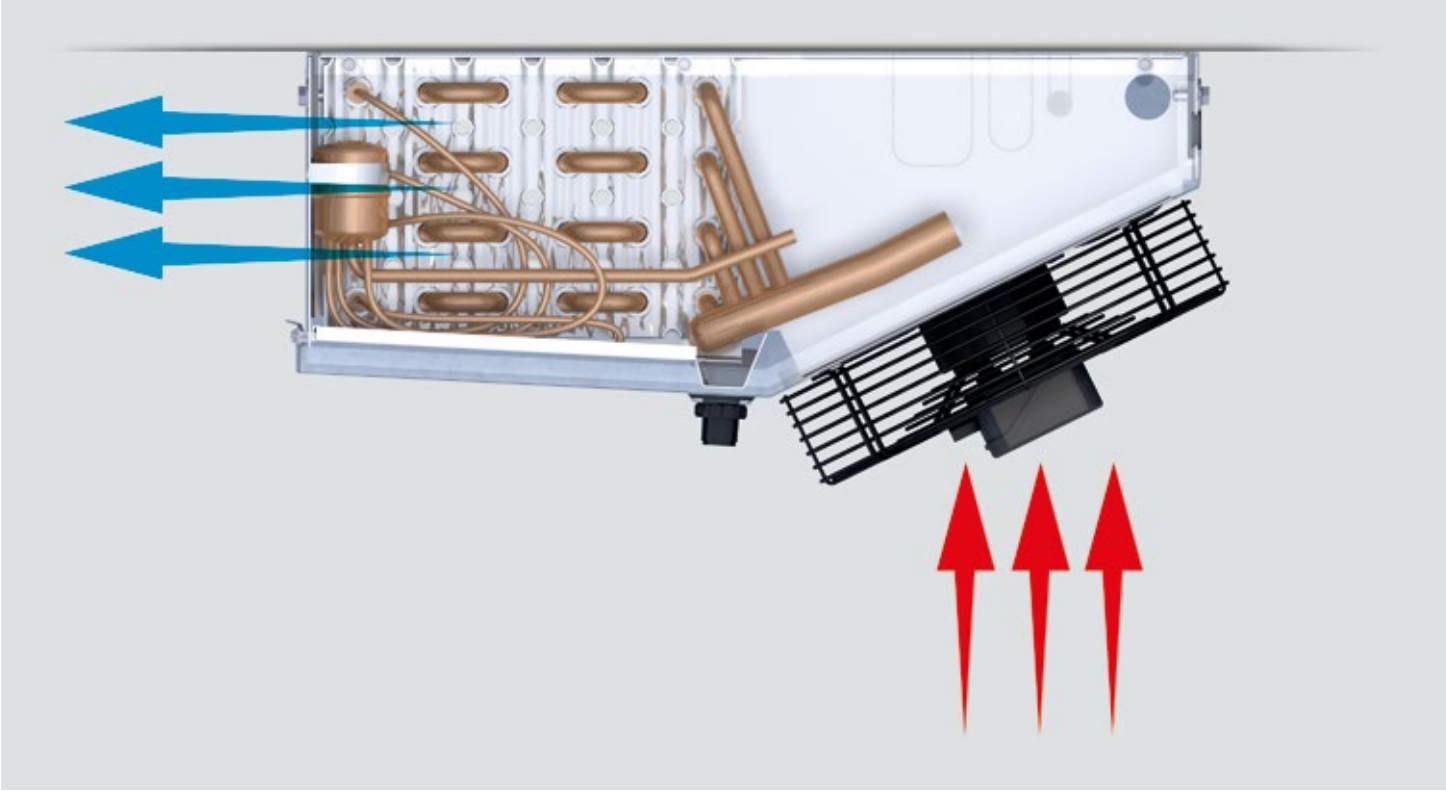

The Kelvion MCK is the ideal air cooler for this application. The decisive factor is the aligned tubing which will produce more cooling power per surface area than standard air coolers.

The compact high-performance ceiling mounted evaporator ensures that the air is uniformly distributed. The room temperature is maintained throughout the cold room, even in the corners. Depending on configuration, applications may range from normal cooling to deep freezing down to -30°C.

It is important that regulatory hygiene guidelines are complied with. The Kelvion MCK has a hinged drip tray and removable side panels for simple, fast and cost-effective cleaning.

We offer the Kelvion MCK with EC or AC fans.
Please contact your Kelvion sales consultant for an optimised design and savings through improved energy efficiency.

HEYTEC
GAAT VERDER ▸ VA PLUS LOIN

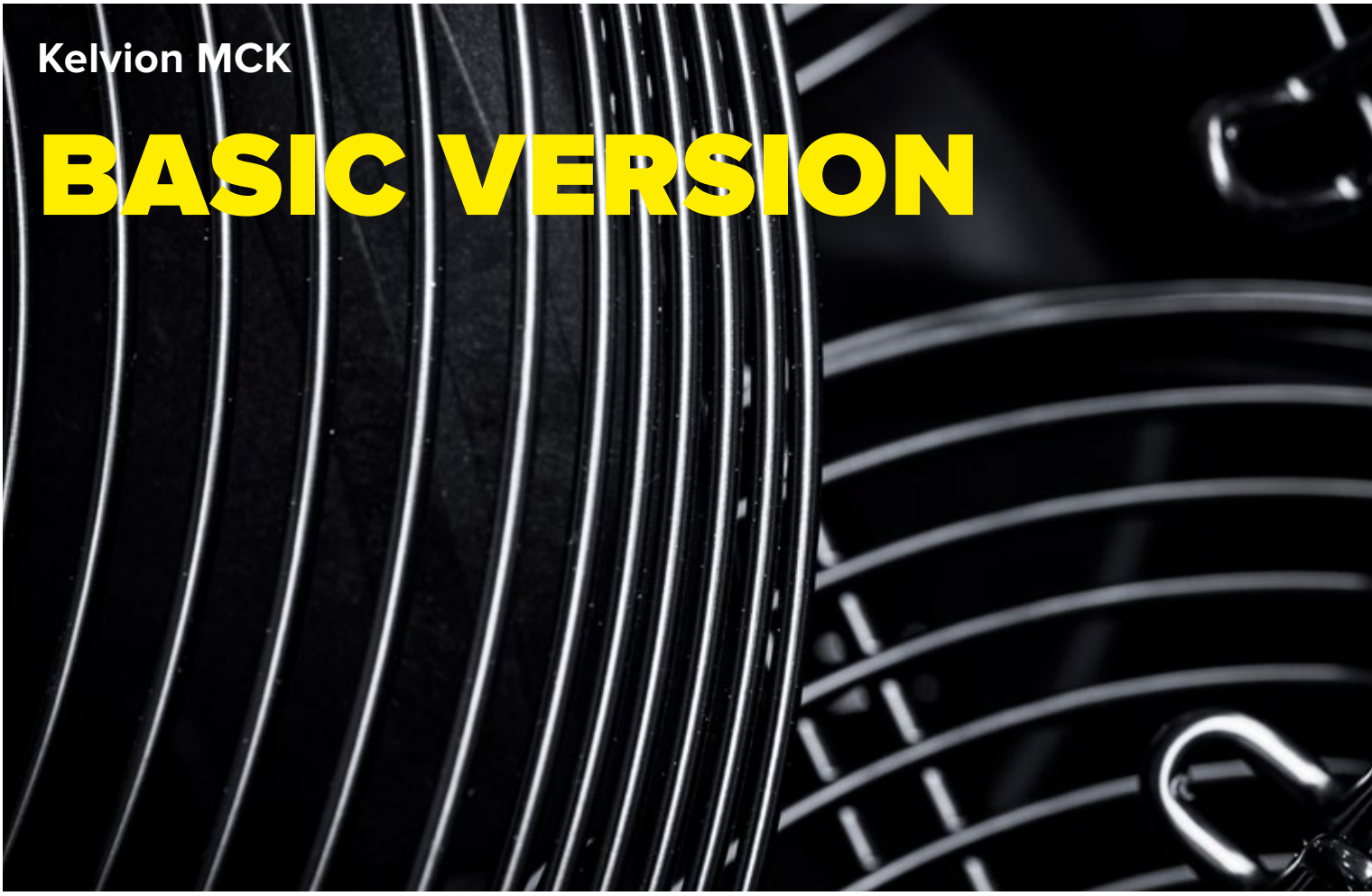

Kelvion MCK

BASIC VERSION

CASING

- Aluminum, Sendzimir zinc-plated steel
- Best quality powder coated edges thanks to high-grade powder coating, RAL 9010 pure white
- Food-safe
- Smooth surfaces: Easy to clean
- Hinged drip tray, removable
- Removable side panels
- Drip tray: additional integrated splash pan

ELECTRIC DEFROST

- Tubular heater: Stainless steel
- Connections: steam-proof
- Mains voltage: 1/N/PE 230V 50/60Hz
- Readily wired for connection box
- Optimized tubular heater configurations ensure fast and even defrosting
- Aluminum tube sleeves: Ensure excellent heat transfer to the fins and thus effective defrosting cycles with optimized service life
- Thanks to those tube sleeves electric defrost can be refitted later on

HEAT EXCHANGER

- Tube: Copper, inner finned, Ø 15 mm
- Fins: Aluminum HFE® fins
- End plates: Aluminum
- Aligned tube system
- Fin spacing:
  A = 4.5 mm
  B = 7.0 mm
- Fins flared to form-fit the core tube
- Internal cleanliness according to DIN 14276
- Connection Inlet:
  MCK A/B with 1 or 2 fans: Single injection via copper pipe for solder connection, sealed
  MCK A/B: Kelvion CAL® distributor with multiple injection, sealed
- Connection Outlet:
  Copper pipe for solder connection with schrader valve UNF 7/16“, sealed

- **Series MCK with Glycol**
  Tube: Cu smooth
  Fins: Aluminum
  End plates: Aluminum

- **Series MCK with pump /NH_3**
  Tube: VA
  Fins: Aluminum
  End plates: Aluminum

FAN UNIT

- AC technology
- Blow through axial fan
- Fan diameter: 300 mm
- Permissible motor ambient temperatures: -30° C up to +60° C
- Supply voltage: 1/N/PE 230V 50/60Hz
- Motor protection: Built-in thermal contact (inaccessible)
- Protection class IP44
- Insulation class: B
- Fans are wired to 1 internal distribution box
- Motor Control:

Phase control	☐
Transformer	☑
Delta/star	☐
Frequency converter*	☑

* Note: An all-pole sine filter (phase-phase ans phase-earth) has to be used

Please observe the manufacturer‘s information!

MOTOR LABEL DATA

Type		50 Hz			60 Hz		
	Ø mm	rpm	W	A	rpm	W	A
MCK	300	1.350	70	0,32	1.500	90	0,40

Motor data per fan

Data provided by the manufacturer

HEYTEC
GAAT VERDER ▸ VA PLUS LOIN

TECHNICAL DATA MCK A (E)

Kelvion MCK | Fin spacing 4.5 mm

Type	Rating Q_0 at 50 Hz, DT1, R404A		Cooling surface	Air flow	Air throw	Tube volume	Connections		Sound	Fans (Operational values at 50 Hz)				
	SC2	SC3			***		Inlet	Outlet	L_{WA}	Blade	Current	Per fan		
	kW	kW	m²	m³/h	m	dm³	Ømm	Ømm	dB(A)	Ømm	230±10% V-1 50Hz	rpm	W	A
MCK-301-4A	1.9	1.5	12.9	1,100	9	2.8	12x1.0*	15x1.0	68	300	230 V-1	1,350	72	0.3
MCK-301-5A	2.1	1.7	16.1	1,070	9	3.5	12x1.0*	15x1.0	68	300	230 V-1	1,350	72	0.3
MCK-301-6A	2.3	1.9	19.3	1,035	9	4.2	12x1.0*	15x1.0	68	300	230 V-1	1,350	72	0.3
MCK-302-4A	3.8	3.0	25.8	2,200	11	5.6	12x1.0*	15x1.0	71	300	230 V-1	1,350	72	0.3
MCK-302-5A	4.2	3.3	32.2	2,140	11	7.0	12x1.0*	22x1.0	71	300	230 V-1	1,350	72	0.3
MCK-302-6A	4.7	3.7	38.6	2,070	11	8.4	10x1.0*	22x1.0	71	300	230 V-1	1,350	72	0.3
MCK-303-5A	6.3	5.0	48.3	3,210	12	10.5	10x1.0**	22x1.0	73	300	230 V-1	1,350	72	0.3
MCK-303-6A	7.0	5.6	57.9	3,105	12	12.6	10x1.0**	22x1.0	73	300	230 V-1	1,350	72	0.3
MCK-304-5A	8.4	6.7	64.4	4,280	16	14.0	10x1.0**	22x1.0	74	300	230 V-1	1,350	72	0.3
MCK-304-6A	9.4	7.5	77.2	4,140	16	16.8	10x1.0**	28x1.5	74	300	230 V-1	1,350	72	0.3

Standard condition	t_{L1}	t_0	DT1
NB2/SC2	0°C	-8°C	8K
NB3/SC3	-18°C	-25°C	7K

Correction factors for other refrigerants

Refrigerant	NB2/SC2	NB3/SC3
R134a	1,00	0,91
R507	0,97	0,97
R22	0,95	0,95

* Single injection
** Multiple injection through Kelvion CAL® distributor
*** Throw limit at 0.5 m/s

Subject to modification.

TECHNICAL DATA MCK B (E)

Kelvion MCK | Fin spacing 7mm

Type	Rating Q_0 at 50 Hz, DT1, R404A		Cooling surface	Air flow	Air throw	Tube volume	Connections		Sound	Fans (Operational values at 50 Hz)				
	SC2	SC3			***		Inlet	Outlet	L_{WA}	Blade	Current	Per fan		
	kW	kW	m²	m³/h	m	dm³	Ømm	Ømm	dB(A)	Ømm	230±10% V-1 50Hz	rpm	W	A
MCK-301-4B	1.5	1.2	5.4	1,280	10	2.8	12x1.0*	15x1.0	68	300	230 V-1	1,350	72	0.3
MCK-301-5B	1.8	1.4	10.6	1,220	10	3.5	12x1.0*	15x1.0	68	300	230 V-1	1,350	72	0.3
MCK-301-6B	2.0	1.6	12.7	1,120	10	4.2	12x1.0*	15x1.0	68	300	230 V-1	1,350	72	0.3
MCK-302-4B	3.1	2.4	16.8	2,560	12	5.6	12x1.0*	15x1.0	71	300	230 V-1	1,350	72	0.3
MCK-302-5B	3.6	2.9	21.2	2,440	12	7.0	12x1.0*	22x1.0	71	300	230 V-1	1,350	72	0.3
MCK-302-6B	4.0	3.2	25.4	2,240	12	8.4	10x1.0*	22x1.0	71	300	230 V-1	1,350	72	0.3
MCK-303-5B	5.4	4.3	31.8	3,660	14	10.5	10x1.0**	22x1.0	73	300	230 V-1	1,350	72	0.3
MCK-303-6B	6.0	4.8	38.1	3,360	14	12.6	10x1.0**	22x1.0	73	300	230 V-1	1,350	72	0.3
MCK-304-5B	7.2	5.7	42.4	4,880	17	14.0	10x1.0**	22x1.0	74	300	230 V-1	1,350	72	0.3
MCK-304-6B	8.0	6.4	50.8	4,480	17	16.8	10x1.0**	28x1.5	74	300	230 V-1	1,350	72	0.3

Standard condition	t_{L1}	t_0	DT1
NB2/SC2	0°C	-8°C	8K
NB3/SC3	-18°C	-25°C	7K

Correction factors for other refrigerants

Refrigerant	NB2/SC2	NB3/SC3
R134a	1,00	0,91
R507	0,97	0,97
R22	0,95	0,95

* Single injection
** Multiple injection through Kelvion CAL® distributor
*** Throw limit at 0.5 m/s

Subject to modification.

HEYTEC
GAAT VERDER ▸ VA PLUS LOIN

DIMENSIONS, WEIGHTS, ELECTRIC DEFROST

Kelvion MCK

Type	Dimensions							Electric Defrost 230V-1 / 400V-3-Y			Weights (net) Unpacked				Weights (gross) Packed				Drain
	H	B	T	L	E_1	E_2	F	Körper	Wanne	Gesamt	MCKA	MCKAE	MCKB	MCKBE	MCKA	MCKAE	MCKB	MCKBE	D
	mm	mm	mm	mm	mm	mm	mm	kW	kW	kW	kg	kg	kg	kg	kg	kg	kg	kg	inch
MCK-301-4	260	1,080	669	672	730	-	175	0,7	0,8	1,5	26	28	24	26	29	32	27	30	G ¾
MCK-301-5	260	1,080	669	672	730	-	175	1,4	0,8	2,1	27	30	28	27	30	33	28	31	G ¾
MCK-301-6	260	1,080	669	672	730	-	175	1,4	0,8	2,1	31	34	26	31	34	37	31	34	G ¾
MCK-302-4	260	1,780	669	672	1,430	-	175	1,2	1,3	2,5	45	48	41	44	50	53	46	49	G ¾
MCK-302-5	260	1,780	669	672	1,430	-	175	2,4	1,3	3,7	47	51	42	46	52	56	47	51	G ¾
MCK-302-6	260	1,780	669	672	1,430	-	175	2,4	1,3	3,7	54	58	54	58	59	63	58	62	G ¾
MCK-303-5	260	2,480	669	672	2,130	1,400	175	3,4	1,8	5,2	67	72	62	66	75	80	68	73	G ¾
MCK-303-6	260	2,480	669	672	2,130	1,400	175	3,4	1,8	5,2	73	78	70	76	80	85	77	82	G ¾
MCK-304-5	260	3,180	669	672	2,830	1,400	175	4,6	0,6	5,2	79	87	72	82	102	118	106	114	G ¾
MCK-304-6	260	3,180	669	672	2,830	1,400	175	4,6	0,6	5,2	87	93	77	82	114	126	110	122	G ¾

The dimensions are only valid for the standard model design!
Note the differences in dimension among versions and accessories.

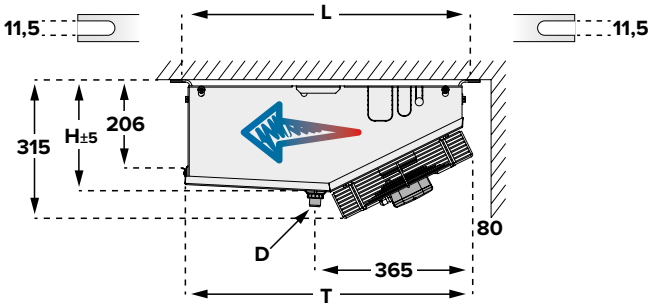

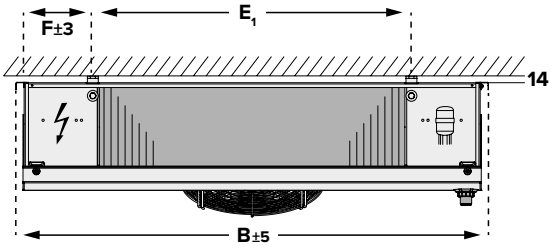

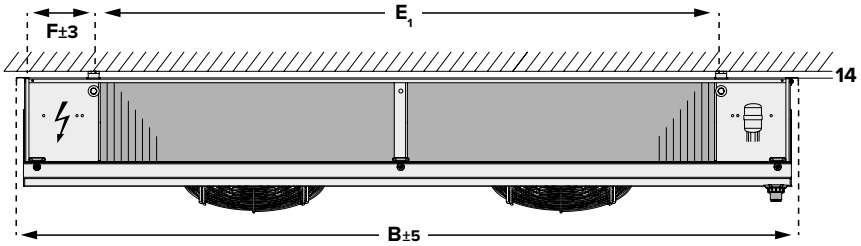

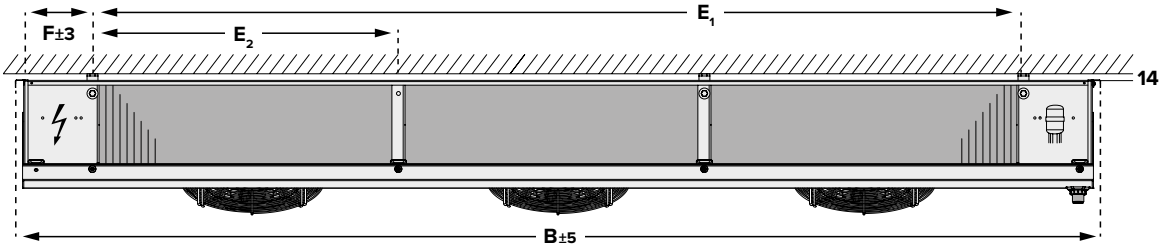

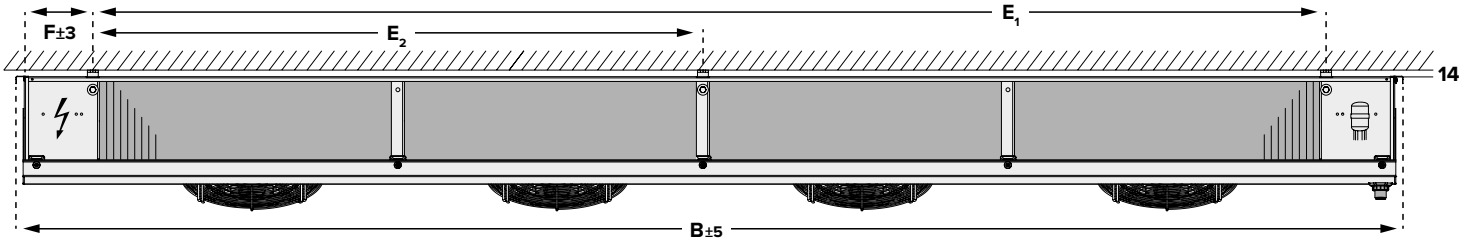

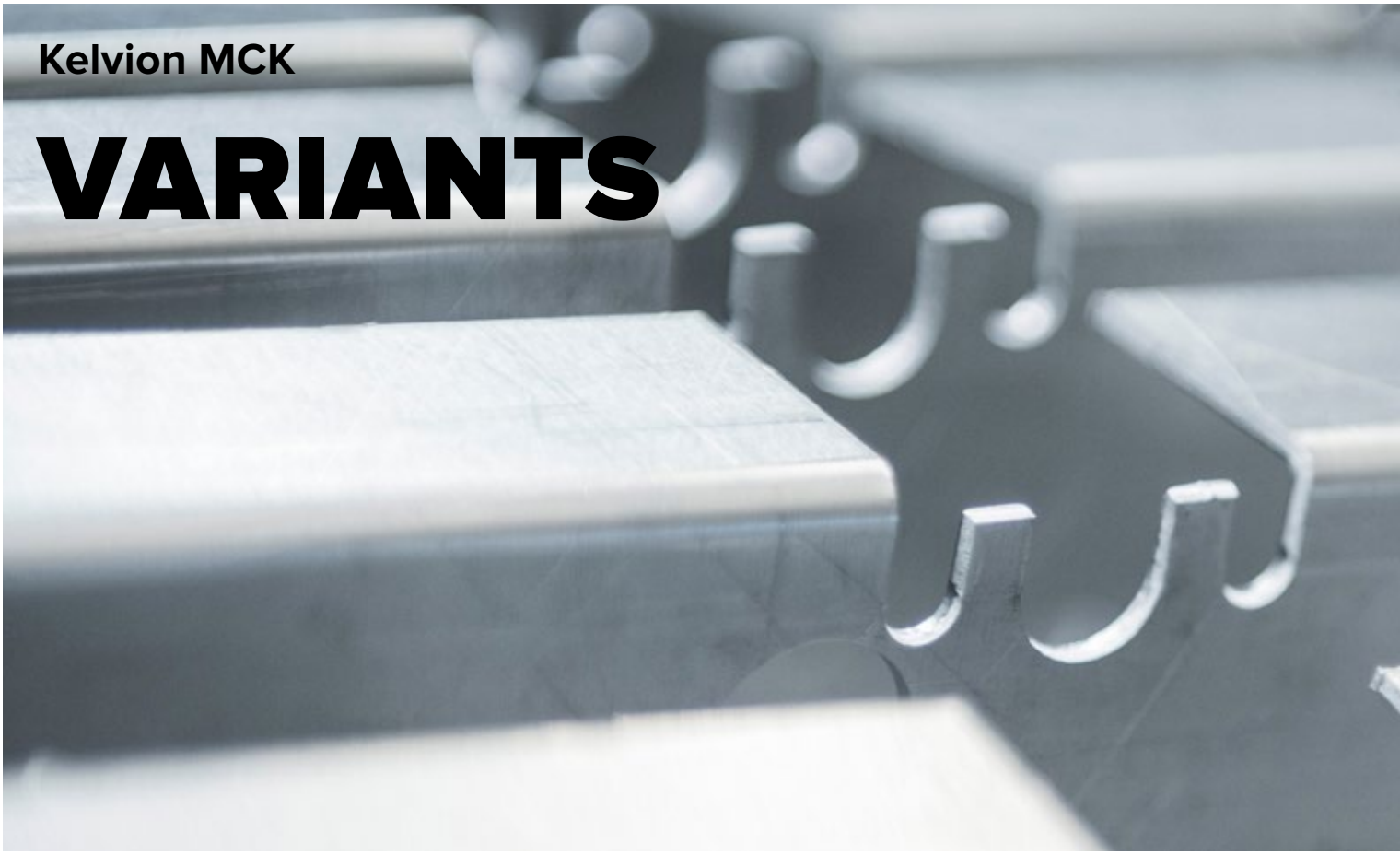

Kelvion MCK

VARIANTS

MOTOR - VARIANTS

070.3 ESM FAN WITH 2 FIXED SPEEDS
Plastic fan blades and Plastic safety grille

070.5 EC FAN WITH CONTROLLABLE SPEED
Fans adjustable

CO_2 - VARIANTS

010.15 CO_2- DIRECT EXPANSION
up to 45 bar operating pressure

010.17 CO_2- DIRECT EXPANSION
up to 60 bar operating pressure

CASING - VARIANTS

053.3 DOUBLE-WALLED, INSULATED DRIP TRAY
Prevents condensed water from forming on the bottom side of the pan, and it reduces the transfer of defrost heat into the cold rooms.
The following dimensions are changed:
Width B: +60 mm
Height H: +30 mm
Depth T: +30 mm

WATER / BRINE

SMALL AND LARGE NUMBER OF DISTRIBUTIONS
up to 16 bar operating pressure

HEYTEC
GAAT VERDER ▸ VA PLUS LOIN

PROTECTION AGAINST CORROSION

054.5 STAINLESS STEEL CASING
Special protection from salts (no chlorine) and organic acids in the cold room air

014.1 CORROSION PROTECTION 1
Tubing: Copper (NH_3 units = stainless steel)
Fins: Aluminum, epoxy-resin-coated
End plates: Aluminum protective coating
Casing: Aluminum/zinc coated steel, protective coating on both sides

014.2 CORROSION PROTECTION 2
Tubing: Stainless steel (V2A)
Fins: Aluminum, epoxy-resin-coated
End plates: Stainless steel
Casing: Aluminum/zinc coated steel, protective coating on both sides
Stainless steel CAL® distributor upon request

010.11 CORROSION PROTECTION 3
Tubing: Stainless steel (V2A)
Fins: Aluminum
End plates: Aluminum
Casing: Aluminum/zinc coated steel, protective coating on one side
Stainless steel CAL® distributor upon request

011.2 CORROSION PROTECTION 4
Tubing: Copper (NH_3 units = stainless steel)
Fins: Aluminum, epoxy-resin-coated
End plates: Aluminum
Casing: Aluminum/zinc coated steel, protective coating on one side

Kelvion MCK

ACCESSORIES

ELECTRIC HEATER HR

For air coolers with blow-through fans, for assembly on site. Suitable for air conditioning, or heating, in the winter. For optimal heat transfer, the heater rods are fitted in Cu tube sleeves.

Construction:

- Fully powder-coated (RAL 9010)
- 230 ± 10% V-1~ or 400 ± 10% V-3~ -Y
- Heater rods with CrNi steel sleeve
- Vapour-tight connections
- Connecting cable 1.0 mm² x 1000 mm
- Casing: steel, continuous hot-dip zinc coated
- Fins: Aluminum
- Tube sleeves: Cu

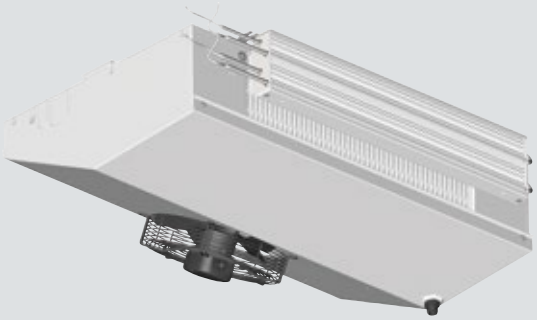

Selection table & Dimensions:

For Type	230±10%V-1~			Dimensions					Weight
	Description	Current A	Capacity kW	H mm	L mm	L_1 mm	E mm	F mm	net kg
MCK-301-4	HR4-70	4,7	1,1	145	755	700	733	76	1,7
MCK-301-5	HR4-70	4,7	1,1	145	755	700	733	76	1,7
MCK-301-6	HR4-70	4,7	1,1	145	755	700	733	76	1,7
MCK-302-4	HR4-140	9,3	2,1	145	1.433	1.400	1.433	76	3,0
MCK-302-5	HR4-140	9,3	2,1	145	1.433	1.400	1.433	76	3,0
MCK-302-6	HR4-140	9,3	2,1	145	1.433	1.400	1.433	76	3,0
MCK-303-5	HR4-210	14,7	3,4	145	2.133	2.100	2.133	76	4,3
MCK-303-6	HR4-210	14,7	3,4	145	2.133	2.100	2.133	76	4,3
MCK-304-5	HR4-280	18,8	4,3	145	2.855	2.800	2.833	76	5,8
MCK-304-6	HR4-280	18,8	4,3	145	2.855	2.800	2.833	76	5,8

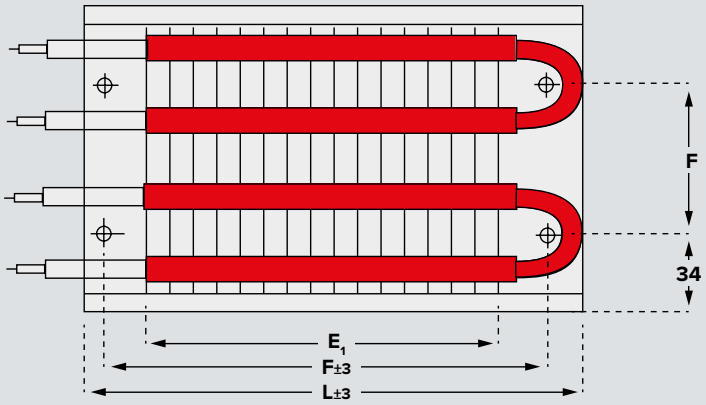

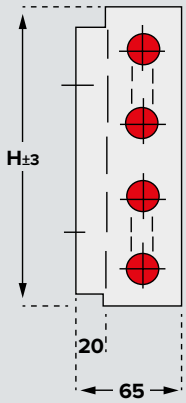

NOTE:
Operate only when the air cooler fans are running, to prevent the cold storage ceiling from overheating. Please observe the corresponding safety guidelines.

Kelvion MCK

CHANGES TO THE PREVIOUS MODEL DE.D PROFESSIONAL

TYPE DESIGNATION CODE MCK

NEW

1	2	3		4	5		6	7	8		9
M	C	K	-	30	1	-	4	A	E	-	

1 Size of product
2 Case style of product
3 Coil block system
4 Fan diameter
5 Number of fans
6 Number of rows deep
7 Fin spacing
8 Defrost system
9 Additional information

Refrigerant & max. operating pressure (Box 9)

HX32	HFC | 32 bar
GL16	Glycol | 16 bar
CX45	CO_2 | 45 bar
CX60	CO_2 | 60 bar

TYPE DESIGNATION CODE KÜBA DE.D PROFESSIONAL

1	2	3	4	5	6
DE	A	E	07	1	D

1 Model range designation
2 Fin spacing
3 Electric defrost
4 Size
5 Number of fans
6 Generation Code

	NO CHANGE	CHANGE
Product name		☑
Type Designation		☑
Type Designation Code		☑
Number of Types	☑	
Cooling Capacity	☑	
Electric Defrost	☑	
Dimensions incl Fixing Points	☑	
Connections	☑	

	NO CHANGE	CHANGE
Accessories	☑	
Fan	☑	
Fan Mounting	☑	
Spare Parts: Casing	☑	
Spare Part: Fan	☑	
Packaging: Type and Size	☑	
Packaging: Printing		☑

© Kelvion • All rights reserved • Subject to changes •
Version 01 • 03/21

www.kelvion.com

HEYTEC
GAAT VERDER ▸ VA PLUS LOIN